Cambridge Assessment International Education
Cambridge International General Certificate of Secondary Education

COMPUTER SCIENCE **0478/12**

Paper 1 **May/June 2019**

MARK SCHEME

Maximum Mark: 75

Published

This mark scheme is published as an aid to teachers and candidates, to indicate the requirements of the examination. It shows the basis on which Examiners were instructed to award marks. It does not indicate the details of the discussions that took place at an Examiners' meeting before marking began, which would have considered the acceptability of alternative answers.

Mark schemes should be read in conjunction with the question paper and the Principal Examiner Report for Teachers.

Cambridge International will not enter into discussions about these mark schemes.

Cambridge International is publishing the mark schemes for the May/June 2019 series for most Cambridge IGCSE™, Cambridge International A and AS Level and Cambridge Pre-U components, and some Cambridge O Level components.

This syllabus is regulated for use in England, Wales and Northern Ireland as a Cambridge International Level 1/Level 2 Certificate.

This document consists of **12** printed pages.

© UCLES 2019

Generic Marking Principles

These general marking principles must be applied by all examiners when marking candidate answers. They should be applied alongside the specific content of the mark scheme or generic level descriptors for a question. Each question paper and mark scheme will also comply with these marking principles.

GENERIC MARKING PRINCIPLE 1:

Marks must be awarded in line with:

- the specific content of the mark scheme or the generic level descriptors for the question
- the specific skills defined in the mark scheme or in the generic level descriptors for the question
- the standard of response required by a candidate as exemplified by the standardisation scripts.

GENERIC MARKING PRINCIPLE 2:

Marks awarded are always **whole marks** (not half marks, or other fractions).

GENERIC MARKING PRINCIPLE 3:

Marks must be awarded **positively**:

- marks are awarded for correct/valid answers, as defined in the mark scheme. However, credit is given for valid answers which go beyond the scope of the syllabus and mark scheme, referring to your Team Leader as appropriate
- marks are awarded when candidates clearly demonstrate what they know and can do
- marks are not deducted for errors
- marks are not deducted for omissions
- answers should only be judged on the quality of spelling, punctuation and grammar when these features are specifically assessed by the question as indicated by the mark scheme. The meaning, however, should be unambiguous.

GENERIC MARKING PRINCIPLE 4:

Rules must be applied consistently e.g. in situations where candidates have not followed instructions or in the application of generic level descriptors.

© UCLES 2019

GENERIC MARKING PRINCIPLE 5: Marks should be awarded using the full range of marks defined in the mark scheme for the question (however; the use of the full mark range may be limited according to the quality of the candidate responses seen).
GENERIC MARKING PRINCIPLE 6: Marks awarded are based solely on the requirements as defined in the mark scheme. Marks should not be awarded with grade thresholds or grade descriptors in mind.

© UCLES 2019

Question	Answer	Marks
1(a)	**Three** from e.g.: – Keyboard – Mouse – Microphone – 2D scanner – 3D scanner – Touchscreen – Webcam // digital camera – Joystick – Trackpad – Sensor – Interactive whiteboard	**3**
1(b)	**Three** from e.g.: – Monitor // touchscreen – Inkjet printer – Laser printer – 3D printer – Speaker – Headphones – LED Projector – DLP – 2D cutter – 3D cutter – Actuator	**3**

© UCLES 2019

Question	Answer	Marks
2(a)	**Two** from: – It is non-volatile – Can be easily disconnected from the computer – It is not directly accessed by the CPU – Suitable example e.g. CD, DVD, USB flash memory	**2**
2(b)(i)	**One** from: – ROM – RAM	**1**
2(b)(ii)	**Two** from: – HDD – SSD – Flash memory	**2**

Question	Answer	Marks
3	1 mark for each correct term, in the correct place: – Data/instructions – Instructions/data (must be the alternative to MP1) – Fetched – RAM – Decoded – Executed	**6**

© UCLES 2019

Question	Answer	Marks
4(a)	**Two** from e.g.: – DVD uses red **laser**/light whereas blu-ray uses **blue**/violet laser/light – DVD has a **smaller** (storage) capacity // Blu-ray has a **larger** (storage) capacity – DVD has **two layers** (of polycarbonate) whereas Blu-ray disks have a **single layer** (of polycarbonate) – DVD has a **slower transfer** rate (of approximately 10 mbps) // Blu-ray has a **faster transfer** rate (of approximately 36 mbps)	**2**
4(b)(i)	2 marks for any two correct stages of working, 1 mark for correct answer. – 500 * 300 * 10 // 150 000 *10 – * 8 then ÷ 8 (anywhere in the process) – 1 500 000 ÷ 1024 ÷ 1024 // 1 500 000 ÷ 1 048 576 – = 1.43 MB	**3**
4(b)(ii)	**Four** from: – **Rollers** are used to move the paper through the printer – **Nozzles** spray/drop/jet ink onto the paper – Ink jets/print head/nozzles are moved across the paper (to distribute the ink) – Different colour inks are mixed to create required colours – Technology could be piezoelectric – Technology could be thermal bubble – **Ink** is heated – … and expands/evaporates into a bubble – Bubble is pushed through the nozzle on to the paper – … then the bubble collapses – Electrical current is applied to a crystal – … which makes it vibrate – … which forces a droplet of ink through the nozzle	**4**

Question	Answer	Marks
5	– Password protection – **Password** is released on the **release date** – Encryption – Encryption **key** is released on the **release date**	**4**

Question	Answer	Marks
6(a)	**Structure** – This is the **layout** of the web page – e.g. placing an image alongside some text // example of tag, such as **Presentation** – This is the **formatting/style** of the web page – e.g. the colour that is applied to some text // example of tag, such as <font-color>	**4**
6(b)	1 mark per each correct row.	**5**

Statement	True (✓)	False (✓)
Cookies can be used to store a customer's credit card details	✓	
Cookies can be used to track the items a customer has viewed on a website	✓	
Cookies will corrupt the data on a customer's computer		✓
Cookies are downloaded onto a customer's computer	✓	
Cookies can be deleted from a customer's computer	✓	

© UCLES 2019

Question	Answer	Marks
6(c)	– Several/multiple **bits** are transmitted **at a time/simultaneously** – Several/multiple wires are used – Data is transmitted in both directions … – … at the **same time/simultaneously**	**4**
6(d)	**One** from: – Uniform resource locator – The website's address – User friendly version of the IP address	**1**
6(e)(i)	**Four** from: – Designed to deny people access to a website – A large number/numerous requests are sent (to a server) … – … all at the same time – The server is unable to respond/struggles to respond to all the requests – The server fails/times out as a result	**4**
6(e)(ii)	**One** from: – Proxy server – Firewall	**1**

© UCLES 2019

Question	Answer	Marks
7(a)	**Six** from: – Motion sensor is used – Sensor sends data/signal to microprocessor – Data/Signal is converted from analogue data to digital data (using ADC) – Value to compared to stored value(s) // – If value is outside range/matches … – … **microprocessor** sends signal to switch lights on – … actuator used to switch light on/off – … timer is set for 2 minutes – Every time movement is detected the timer is reset – When timer reaches **0/120/times out microprocessor** sends signal to switch lights **off** – **Process** is continuous	**6**
7(b)	**Three** from: – Read only memory – Non-volatile memory // Contents of memory are retained when power is turned off//permanent storage – Primary storage // directly accessed by the CPU – Holds firmware/boot-up instructions/start-up instructions/BIOS – Cannot be written to	**3**

© UCLES 2019

Question	Answer	Marks
8(a)	1 mark per each correct logic gate, with correct input(s) 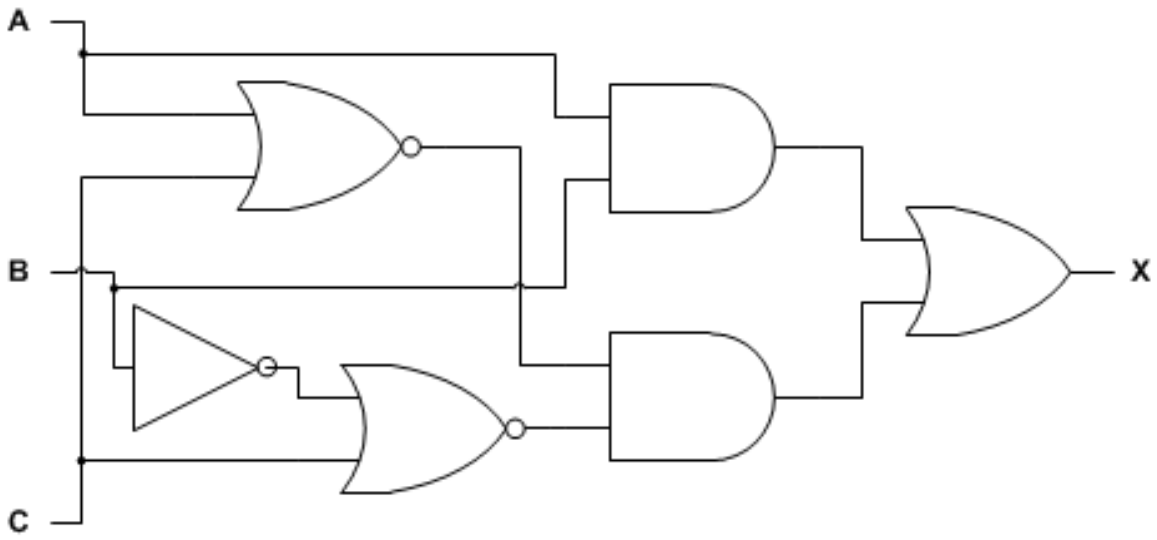	**6**

Question	Answer	Marks
8(b)	4 marks for 8 correct outputs 3 marks for 6/7 correct outputs 2 marks for 4/5 correct outputs 1 mark for 2/3 correct outputs	**4**

A	B	C	Working space	X
0	0	0		**0**
0	0	1		**0**
0	1	0		**1**
0	1	1		**0**
1	0	0		**0**
1	0	1		**0**
1	1	0		**1**
1	1	1		**1**

© UCLES 2019

Question	Answer	Marks
9	1 mark per each correct parity bit:	**3**

	Parity bit							
Register A	**1**	0	1	0	0	1	0	1
Register B	**1**	1	0	0	0	0	0	1
Register C	**1**	1	0	0	0	0	1	1

Question	Answer	Marks
10	**Four** from: – **Electrical** field/charge is spread across the screen – Sensors are located around the screen // sensors are used to read the electric field – When finger touches screen, the charge/ is transferred to the user – … as it is affected by the conductivity of another object – Coordinates of touch determined/calculated/measured	**4**

© UCLES 2019